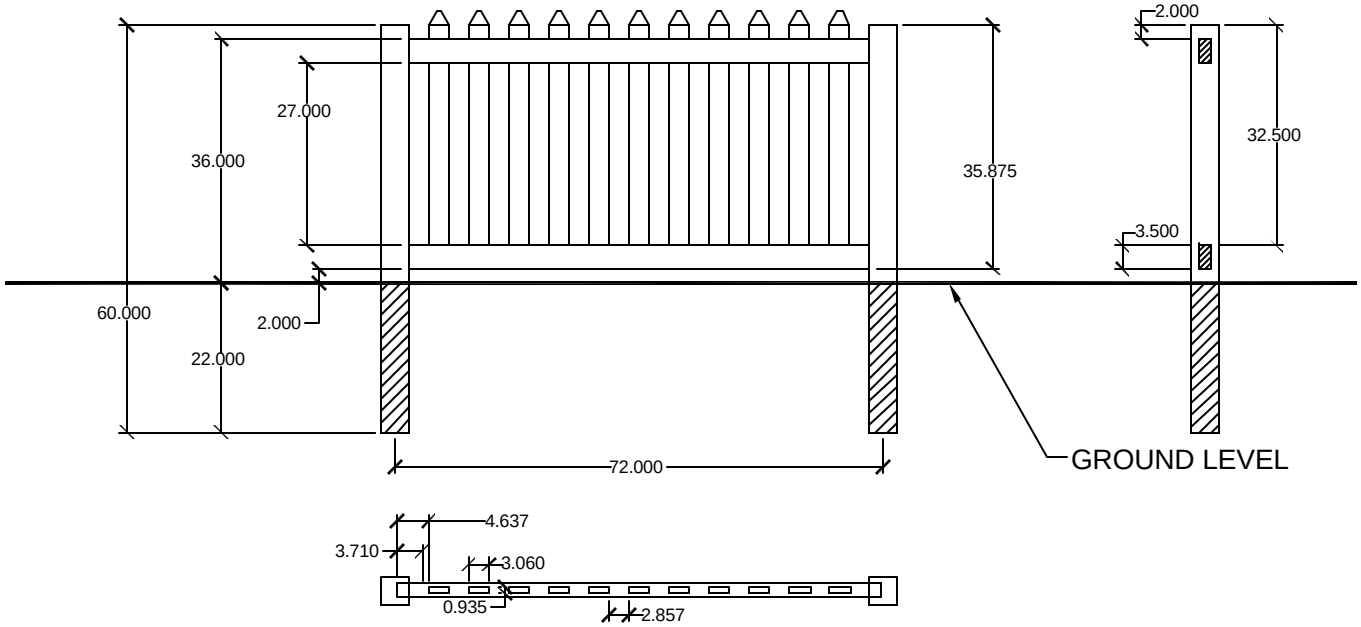

PEAK PROFILE

Heights	36", 42", 48", 60"
Post Size	4" X 4"
Post Spacing	72"
Picket Size	3"
Picket Spacing	3"
Colors	White, Tan, Sand, Grey

36" Height

Alta 1 Specifications